HANECO LIGHTING LED INSTALLATION GUIDE

LED YOUR FUTURE

This range of HANECO LIGHTING LED downlights have been tested to the AS/NZS60598.2.2 standards and are approved to side abut and cover the recessed luminaire.

Building insulation used to abut and cover the luminaire must meet the following requirements:

1: Be of a type that can maintain its dimensions and structural integrity when exposed to the maximum surface temperatures of the class of luminaire, being 90 Degree Celsius and must withstand a 30s needle flame test carried out in accordance with AS/NZS 60695.11.5 with the flame applied to all surfaces of the sample.

2: Loose fill insulation is not permitted to abut or cover this luminaire.

IC ABUTTED & COVERED

Abutted: may be installed in or against timber structure
Covered: may be installed under thermal installation

*Installation Instructions:

1. Take LED fitting out from box.
2. Cut a hole as per instruction below.
3. Put the plug into the socket.
4. Insert LED Downlight into the pre-cutted hole while gently releasing mounting springs.
5: Place the driver above the insulation as far from the luminaire as the lead allows

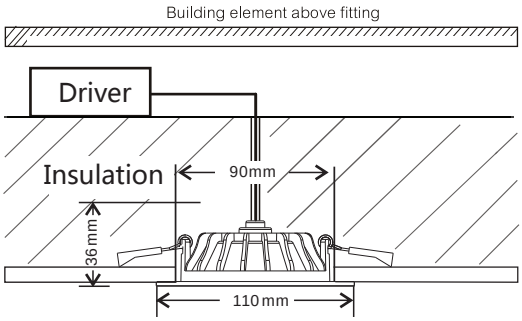

12W	SMD	DIM	IP44	240V
-25° ~50°	↑	Alum.	350mA	30VDC

Installation of the product is to be completed by a licenced electrician, in accordance with these instructions, relevant Australia standards and local regulations.

PRODUCT CODE:Aurora1000-V2

HANECO LIGHTING

www.haneco.com.au

Lighting Council AUSTRALIA MEMBER 2016