HANECO LIGHTING LED INSTALLATION GUIDE

LED YOUR FUTURE

Haneco Lighting LED Downlights require clearance around the heat sink including thermal insulation and building structural components to be at a minimum of 25mm. This clearance is based on a maximum ambient temperature of 70℃. The electronic LED driver must be located at least 50mm away from the heat sink in a well ventilated area.

DO NOT COVER

Insulation or combustible material must not come in contact with the luminaire or LED unit.

*Installation Instructions:

1. Take LED fitting out of the box.
2. Cut a hole as per instruction below.
3. Put the plug into the socket.
4. Insert LED Downlight into the pre-cut hole while gently releasing mounting springs.

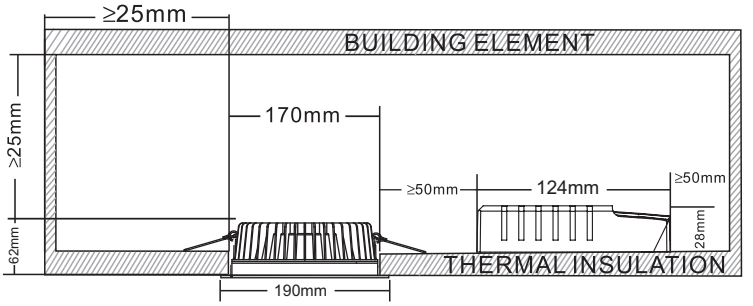

25W	SMD	DIM	IP65	240V
-20° ~ 45°	↑	Alum.	900mA	25VDC

Installation of the product is to be completed by a licensed electrician, in accordance with these instructions and relevant Australia standards/ local regulations.

PRODUCT CODE: Aurora190

HANECO LIGHTING

For more information
1300 001 LED
www.haneco.com.au

Lighting Council AUSTRALIA MEMBER 2015