ORBIT15W1P-5K

OPBIT1P + x1 PAR15W38-5K

QUICK FACTS

Input power	**15W**
Power Factor	**≥ 0.9**
IP Rating	**44**
Dimming	**No**
Lumen Output	**1386lm**
CCT	**5000K**
CRI	**>80**
Beam Angle	**60°**
Cap Base	**E27**
Fascia Colour	**Black**
Installation	**Surface mount**
Warranty	**3 years**

PRODUCT SPECIFICATIONS

Supply Voltage	**240-265V**
Supply Frequency	**50-60Hz**
Cable	**Flex**
Body	**Aluminium**
Diffuser	**PC**
Driver	**Remote**
Weight	**G.W : 4.2kgs**
	N.W : 3.5kgs
Ambient Temp	**-20°C - 50°C**
Avg. lifetime	**≥50,000 hrs@ ta 25°C**

PHOTO

PHOTOMETRIC DIAGRAM

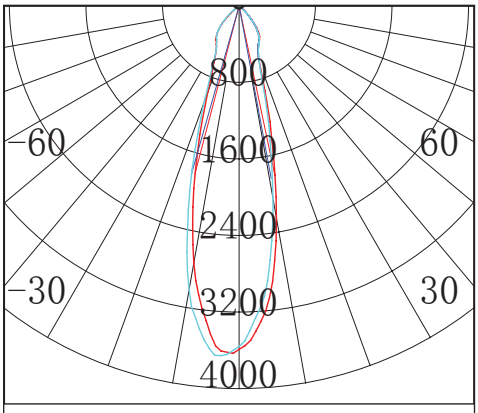

UNIT: cd

C0/180 26.7deg

C90/270 26.8deg

DIMENSIONS

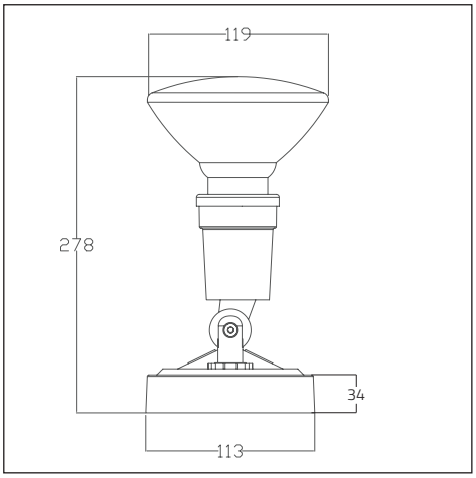

Subject to change without notice, errors and omission excepted. Always make sure to use the most recent release.