TRIPROOF20/40W12-4K-EM

QUICK FACTS

Input power	**20W / 40W**
Power Factor	**≥0.9**
IP Rating	**65**
Dimming	**NO**
Lumen output	**1450lm / 3797lm**
CCT	**4000K**
CRI	**80**
Beam Angle	**120°**
Fascia Colour	**White**
Installation	**Surface Mount**
Warranty	**5 years**

PRODUCT SPECIFICATIONS

Supply Voltage	**240-265V**
Supply Frequency	**50-60Hz**
Cable	**NO**
Body	**PC**
Diffuser	**PC**
Driver	**Integral**
Weight	**G.W : 2.6kgs**
	N.W : 2.0kgs
Ambient Temp	**0°C - 65°C**
Avg. lifetime	**≥50,000 hrs@ ta 25°C**

Option:
TRIAC Dimming, DALI Dimming, 1-10V Dimming, Emergency and Microwave Sensor, Emergency, Microwave Sensor

PHOTO

PHOTOMETRIC DIAGRAM

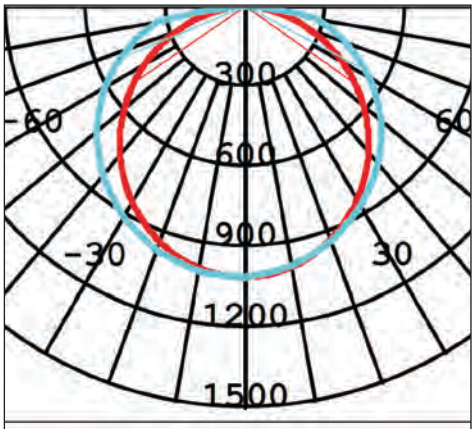

UNIT: cd

C0/180 110.2deg

C90/270 129.5deg

DIMENSIONS

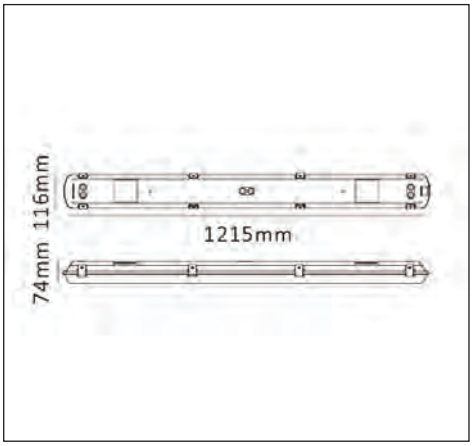

Subject to change without notice, errors and omission excepted. Always make sure to use the most recent release.

HANECO LIGHTING
www.haneco.com.au
Email: info@haneco.com.au

Last update
February 3, 2017 11:29 AM

TRIPROOF20/40W12-4K-EM

EMERGENCY PACK SPECIFICATIONS

QUICK FACTS

- **Super thin design**
- **Wide Output Voltage Range**
- **Constant Current Driver**
- **Safe no load operation**
- **Overload and Short Circuit Protection**
- **Overheating Protection**
- **Simple Installation**
- **SELV equivalent**
- **Protection Class II**
- **Pisuppression in accordance with**
- **EMC550 15:2006+A1:2007+A2:2009**

PHOTO

WIRING DIAGRAM

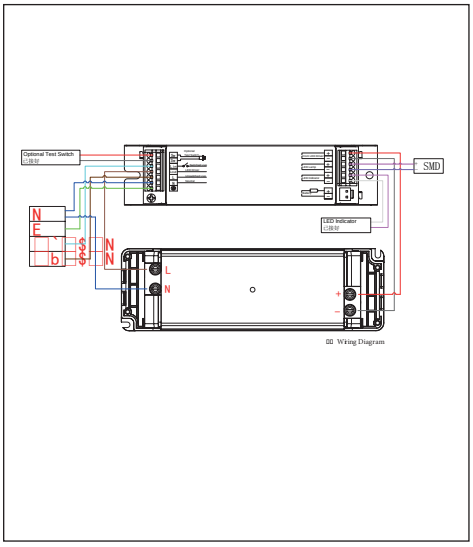

PRODUCT SPECIFICATIONS

Cut-Off Voltage	**3.0V Max**
Max Charge Voltage	**4.23V**
Max Charge Current	**220mA**
Max Discharge Current	**1000mA**
Max Battery Temperature	**70°c**

Subject to change without notice, errors and omission excepted. Always make sure to use the most recent release.