SN80WS-SUN SUPERNOVA

QUICK FACTS

Input power	**80W**
Power Factor	**≥0.9**
IP Rating	**67**
Dimming	**1-10V**
Lumen output	**10900lm**
CCT	**5000K**
CRI	**>80**
Beam Angle	**110°**
Fascia Colour	**Black**
Installation	**Surface/Suspension**
Warranty	**5 years**

PRODUCT SPECIFICATIONS

Supply Voltage	**220-240V**
Supply Frequency	**50-60Hz**
Cable	**2.5M Flex&Plug**
Body	**Aluminium**
Diffuser	**PC**
Driver	**Integral**
Weight	**G.W : 3.80kgs**
	N.W : 3.30kgs
Ambient Temp	**-30°C - 60°C**
Avg. lifetime	**≥55,000 hrs@ ta 50°C**

Option:
Intellisensor

PHOTO

PHOTOMETRIC DIAGRAM

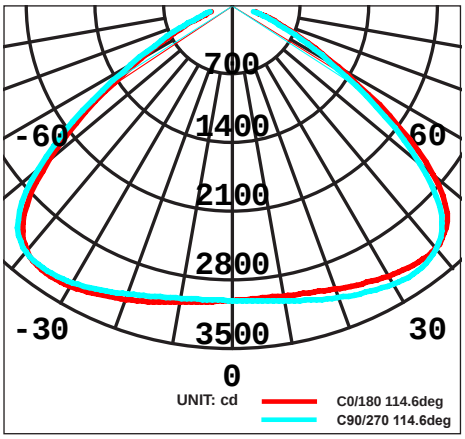

DIMENSIONS

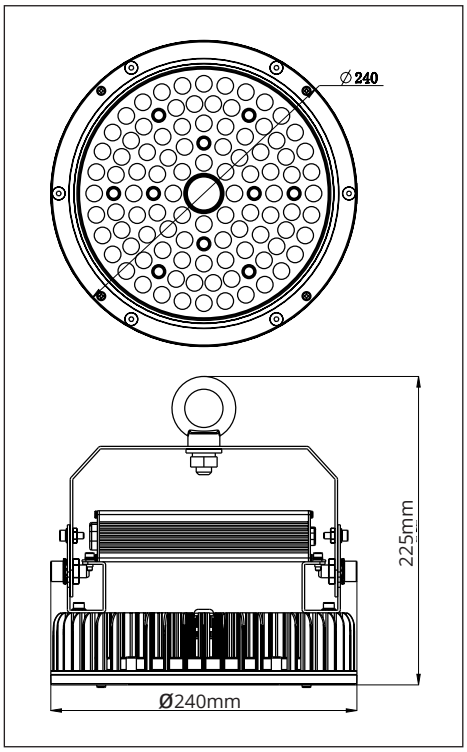

Subject to change without notice, errors and omission excepted. Always make sure to use the most recent release.

SN80WS-SUN SUPERNOVA

QUICK FACTS

- **Provides an energy saving without sacrificing visual comfort.**
- **Ambient light dependent control.**
- **Directly connected to 1-10V interface.**
- **Simple setting of target light level by means of potentiometer.**

SPECIFICATIONS

Dimming Range	**10-100%**
Detection Angle	**90°**
Operating Temperature	**0-45°c**
IP Rating	**IP20**

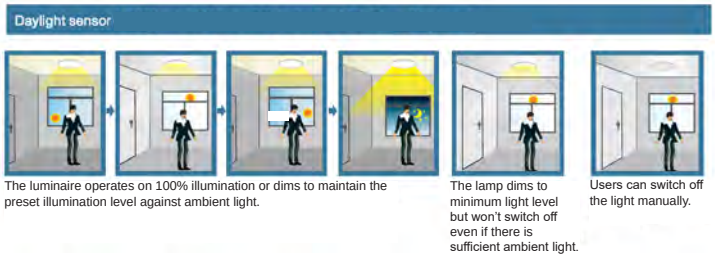

PHOTO

SUPERNOVA MOUNT

SURFACE MOUNT

TYPICAL WIRING DIAGRAM

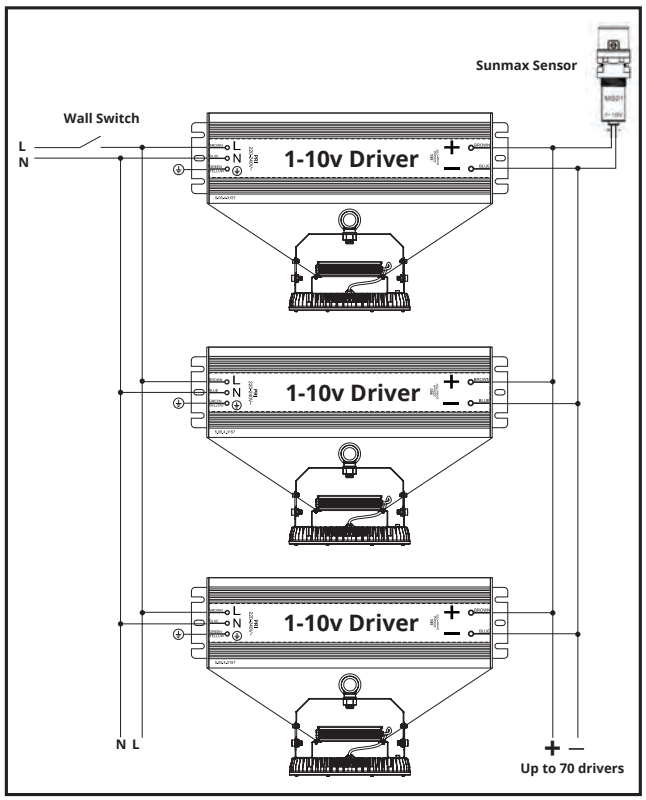

Subject to change without notice, errors and omission excepted. Always make sure to use the most recent release.

HANECO LIGHTING
www.haneco.com.au
Email: info@haneco.com.au

Lighting Council AUSTRALIA MEMBER

Last update
August 22, 2017 2:13 PM