HANECO LIGHTING LED INSTALLATION GUIDE

FLEXION IP20 ACCESSORIES

PRODUCT CODE: FLEXPACK-IP20

Product should be installed by a qualified electrician.
Prior to installation ensure power is off at fuse box to prevent electrical shock.

Contents

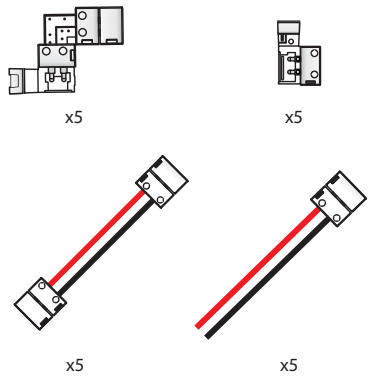

1

Cut strip to length at indicated intervals (every 100mm). Ensure care is taken to avoid damage to terminals.

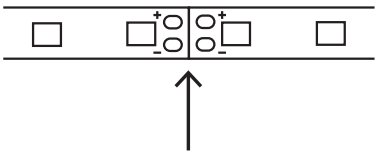

2

Carefully remove solder as required before connecting joiners.

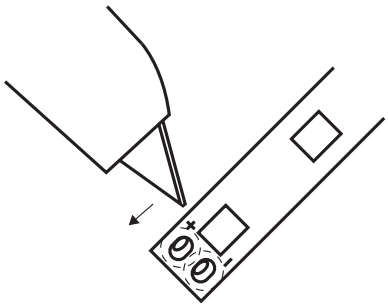

3

Attach circuit using joiners as required, observing polarity of circuit

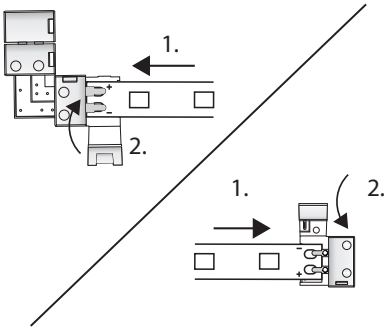

4

Attach connectors as required observing polarity of circuit

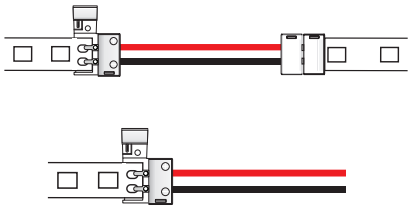

5

Wire to driver terminals. Contact Haneco for suitable driver.

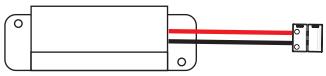

6

Ensure that surface is clean and dry by using an isopropol alcohol

Suitable for mounting on normally flammable surfaces

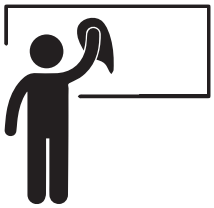

7

Peel off backing tape and fix into position

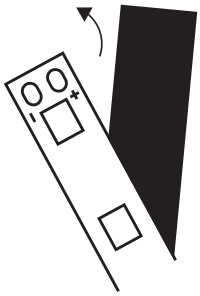

8

Fix driver to surface with screws

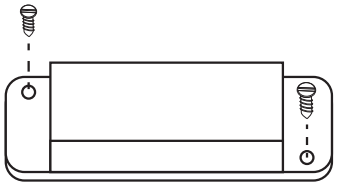

HANECO
IDEAS THAT SHINE

For more information
1300 001 LED
www.haneco.com.au