HANECO LED DOWNLIGHT INSTALLATION GUIDE

DULAR

Product Code: DULAR-ADJ-TRI
DULAR-ADJ-BLK

This range of Haneco Lighting LED products have been tested as AS/NZS60598.2.2:2001 standards and are approved to the luminaire will not exceed 90°C when loosely covered with ceiling insulation.
Building insulation is used to loosely cover the luminaire must meet the following requirement:
1. Be of a type that can maintain it's dimensions and structural integrity when exposed to the maximum surface temperatures of the class of luminaire, being 90°C and must withstand a 30s needle flame test carried out in accordance with AS/NZS 60695.11.5 with the flame applied to all surfaces of the sample.
2. (New Zealand only) Loose fill insulation as defined in NZS4246 is not permitted to abut or cover this luminaire.

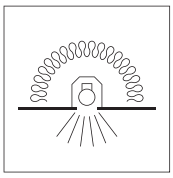

*INSTALLATION
1. Cut 90mm diameter hole
2. Connect live and neutral into the luminaire
3. Select CCT setting (WW, NW, CW)

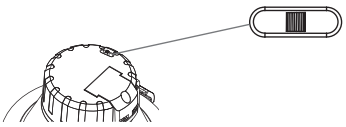

4. Hold mounting clips up to sides of downlight and insert downlight into cut-out so that the springs retract onto rear face of ceiling

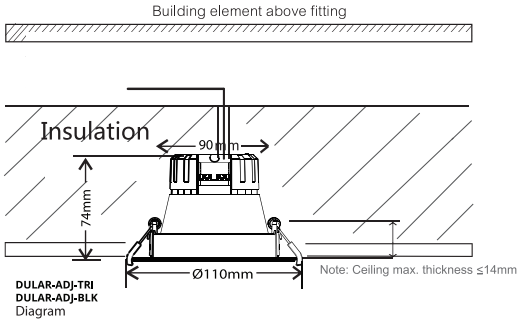

7W	SMD
240V	-20° ~ 45°
DIM	IP20
↑	Built-in Driver

Installation of the product is to be completed by a licensed electrician, in accordance with these instructions and relevant New Zealand standards and local regulations.

Warning:

a. Type Y: If the external flexible cable or cord of this luminaire is damaged, it shall be exclusively replaced by the manufacturer or by a service agent or licenced electrician in order to avoid hazard.

b. ⚠ Non-user replacable light source.
c. The diffuser is not replaceable.