Battens & LED Tubes

DURALITE

DURALITE20W06-EM

SAP CODE: 2001497

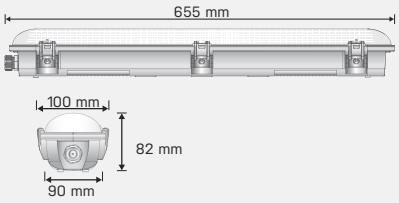

Photometric Diagram

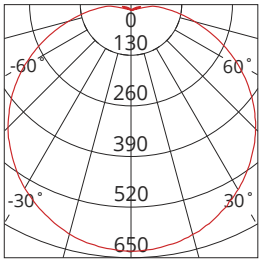

Unit: cd
– C0/180 120.0deg
– C90/270 120.0deg

20W outdoor LED batten

Switchable 4000K or 5000K, weatherproof LED batten with emergency battery.

Accessories

SUSPENSION KIT

KEY INFORMATION

Lumen Output	2100 / 2070lm
Input Power	20W
Hole Cutout Size	N/A
Install	SUSPENDED, SURFACE MOUNT
Dimming Options	Non-Dimmable
Trim Colour	Grey
Warranty	4yr
IP Rating	IP66
IK Rating	IK09
IC Rating	N/A
Rebate Scheme Approvals	COMING SOON

PHOTOMETRIC

Efficacy	105 / 103lm/W
LED	SMD
CCT	4000 / 5000K
CRI	>80
Beam Angle	120°

ELECTRICAL

Driver	Integral
Supply Input	220-240V, 50/60Hz
Driver Output Voltage	90VDC
Power Factor	>0.9
LED Input Current (nominal)	200mA
Useful life @Ta25° (L70)	50,000hr

CONSTRUCTION

Housing	Polycarbonate
Optics	Polycarbonate Diffuser
Adjustable Angle	N/A
Fixings/Hardware	Mounting Bracket
Connection Type	Terminal Block
Total Weight	1.3kg
Dimensions	655 x 100 x 82mm
Operating Ambient Temp.	0 to 50°C
Electrical Classification	Class 1

Specification subject to change without prior notice. Last updated **29/03/2019**

Emergency Lighting

Emergency Battery Kit

EM-Battery Kit

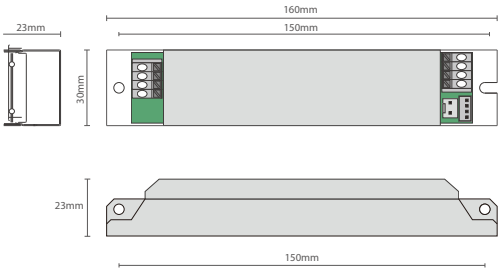

Self charging battery for DURALITE20W06-EM during blackouts

Emergency Light Kit ensures that lights remain on at a light level sufficient to allow people to see their way for three hours if there is a power failure

QUICK FACTS

- Self charging LiFeP04 battery
- Keeps lights on at emergency level for three hours
- Test switch with integrated LED indicator

SPECIFICATIONS

Max Battery Temperature	70°
Battery Warranty	4 Years
Emergency Classification	C0:D50, C90:D32
Emergency Power (Max)	6W
Battery Charging Current	0-250mA

MAXIMUM SPACINGS FOR CLASS D LUMINAIRES

Maximum Spacings Mounting Height (Metres)

Luminaire Classification	2.1	2.4	2.7	3.0	3.3	3.6	4.0	4.5	5.0	6.0	7.0	8.0	9.0	10	15	20
D32	11.5	13.2	14.8	16.5	17.6	18.0	18.5	19.0	19.5	20.1	20.5	20.7	20.6	20.3	0.0	N/A
D40	11.5	13.2	14.8	16.5	18.1	19.5	20.1	20.7	21.2	22.1	22.6	23.0	23.1	23.0	0.0	N/A
D50	11.5	13.2	14.8	16.5	18.1	19.8	21.8	22.5	23.1	24.1	24.9	25.4	25.7	25.8	23.6	0.0
D63	11.5	13.2	14.8	16.5	18.1	19.8	22.0	24.5	25.2	26.4	27.3	28.0	28.5	28.8	27.9	0.0
D80	11.5	13.2	14.8	16.5	18.1	19.8	22.0	24.7	27.5	28.9	30.0	30.9	31.5	32.1	32.3	28.8

AS/NZS 2293.1:2018

Wiring diagram

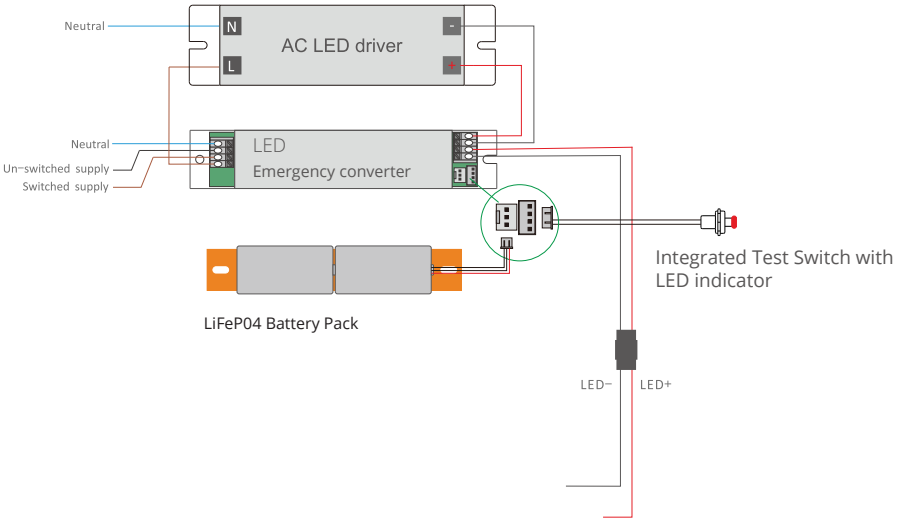

Specification subject to change without prior notice. Last updated **09/05/2019**